BRV250HD BLIND RIVETER

Wespro Pneumatic Tools

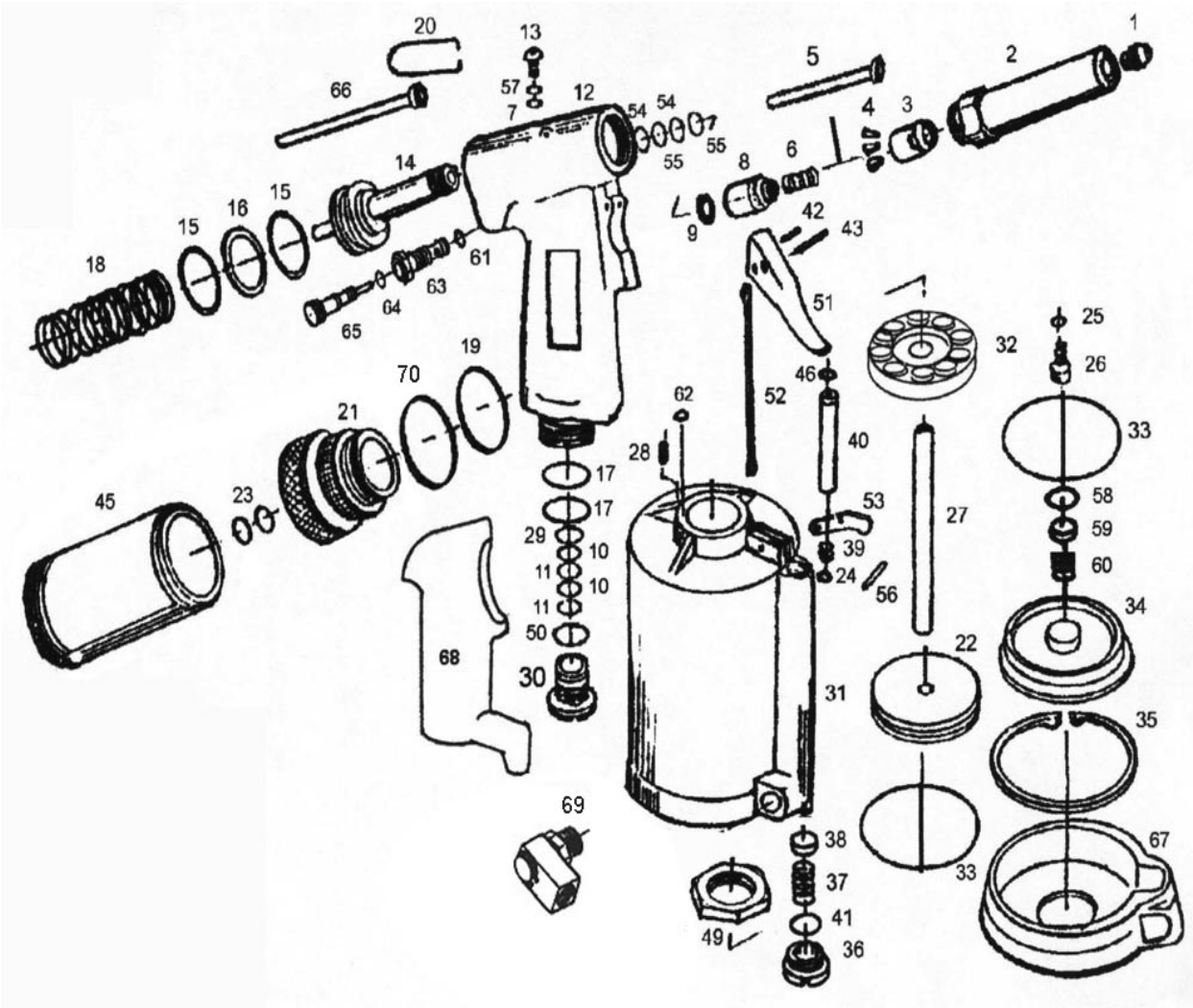

Western Office 604-298-2933 Eastern Office 905-839-6111 www.wescoproductiontools.com

BRV250HD BLIND RIVETER

Wespro Pneumatic Tools

No.	Description	Order Code	Qty
1A	Nosepiece 1/8"	188083	1
1B	Nosepiece 5/32"	188084	1
1C	Nosepiece 3/16"	188085	1
1D	Nosepiece 1/4"	106160	1
2	Head	129789	1
3	Jaw Housing	106147	1
4	Jaw	105915	3
5	Pusher Tube	WP 500007A	1
6	Spring	188081	1
7	O-Ring Seal	190375	1
8	Jaw Housing Coupler	106088	1
9	Nut	106148	1
10	X-Ring Seal	97046	2
11	O-Ring Washer	97061	2
12	Hydraulic Section	187446	1
13	Oil Plug	106116	1
14	Hydraulic Plunger	WP 500051	1
15	O-Ring Seal	97034	2
16	Washer	97035	1
17	O-Ring Seal	106133	2
18	Retain Spring	WP 5002580	1
19	O-Ring Seal	120311	1
20	Hanging Ring	106121	1
21	Screw Plug	176214	1
22	Piston Disc	106151	1
23	O-Ring Seal	97056	2
24	O-Ring Seal	97062	1
25	Spring Washer	WP 11526	1
26	Piston Head Lock Screw	106154	1
27	Plunger Rod	106155	1
28	Pin	WP 35013	1
29	O-Ring Seal	106163	1
30	Screw Plug	106132	1
31	Air Cylinder Body	WP 500029V	1
32	Damping Ring	WP 500083	1
33	O-Ring Seal	97051	2
34	Air Cylinder Cap	188170	1
35	Clip	97052	1
36	Plug Screw	97053	1
37	Valve Pressure Spring	85478	1

No.	Description	Order Code	Qty
38	Valve Plate	WP 11542	1
39	Valve Spring	97054	1
40	Valve Rod	187708	1
41	O-Ring	188172	1
42	Pin	106125	1
43	Pin	106126	1
45	Mandrel Bottle Assembly	176213	1
46	O-Ring Seal	85485	1
49	Lock Nut	106134	1
50	O-Ring Seal	188141	1
51	Trigger	106127	1
52	Trigger Rod	140362	1
53	Trigger Lever	188171	1
54	X-Ring Seal	97037	2
55	Ring Washer	97038	2
56	Pin	106131	1
57	Fill Washer	140363	1
58	Retaining Ring	106145	1
59	Rubber Plate	190369	1
60	Spring	106146	1
61	O-Ring Seal	194331	1
62	O-Ring	120316	1
63	Adjustable Bushing	WP 550321	1
64	O-Ring Seal	120319	1
65	Adjustable Screw	167940	1
66	Pusher Tube	WP 500080	1
67	Rubber Cushion	97063	1
68	Hand Grip	WP 54061	1
69	Universal Joint Kit	WP 021470	1
70	O-Ring Seal	WP P36x2	1
	Spanner (17/19 mm)	190397	2
	Spanner (11/13 mm)	190398	1
	Oil Syringe	120340	1
	Allen Wrench 5 mm	31968	1

Optional Parts:

1E	Nosepiece for 3/16" monobolt	213705
1F	Nosepiece for 1/4" monobolt	213706
1G	Nosepiece for 3/16" Magna-Lok	213707
1H	Nosepiece for 1/4" Magna-Lok	213708

Western Office 604-298-2933 Eastern Office 905-839-6111 www.wescoproductiontools.com